SILT SAVER

SEDIMENT CONTROL PRODUCTS
WWW.SILTSAVER.COM

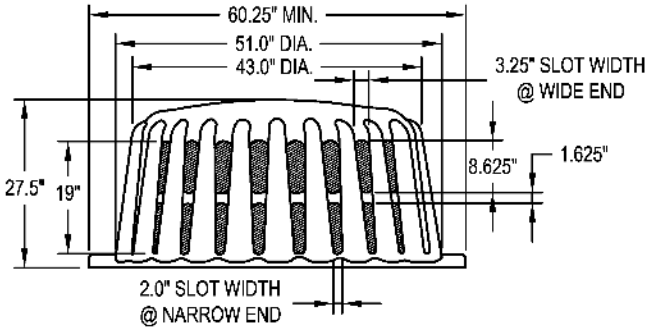

ELEVATION VIEW

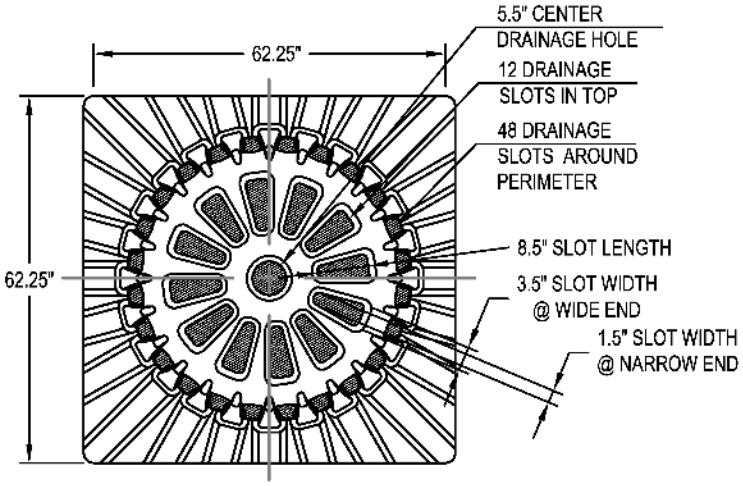

PLAN VIEW

FILTER OPTIONS

FILTER IS AVAILABLE IN TWO OPTIONS:

1) ALL HIGH-FLOW FILTER
2) HIGH-FLOW MATERIAL ON TOP HALF, HIGH-EFFICIENCY MATERIAL ON BOTTOM HALF (THIS FILTER COVER IS RECOMMENDED FOR ALL ROADWAY PROJECTS.) (DOT FILTER)

IT IS THE PURCHASERS RESPONSIBILITY TO PURCHASE APPROPRIATE FILTER. PURCHASER SHALL PROVIDE ROCK FOR FILTER POCKETS.

FILTER INSTALLATION

FILTER SLIDES DIRECTLY OVER FILTER FRAME. TO KEEP FILTER FRAME IN PLACE OVER STORM STRUCTURE, ROCK POCKETS ARE SEWN DIRECTLY INTO FILTER. EVERY FILTER COMES IN ONE PIECE FOR EASY INSTALLATION.

MAINTENANCE

ALL TEMPORARY EROSION, SEDIMENTATION, & POLLUTION CONTROL PRACTICES SHOULD BE INSPECTED DAILY. CONTRACTOR SHALL REMOVE SEDIMENT AND DISPOSE OF IN A PROPER MANNER. INSPECT FRAME AND FILTER DAILY FOR CUTS, ABRASIONS, AND PROPER INSTALLATION. REPLACE OR REPOSITION AS NECESSARY.

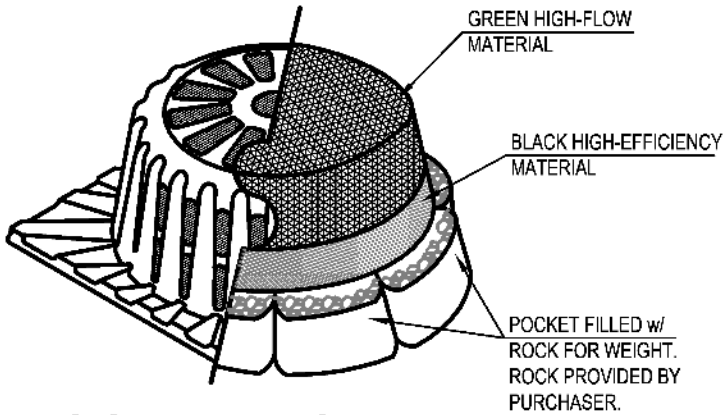

ISOMETRIC VIEW

SHOWN WITH DOT FILTER

REPLACEMENT FILTERS: MODEL # S-240HF OR S-440B DOT - VDOT Approved

SQUARE FRAME & FILTER ASSEMBLY

Model # S-400B

FRAME MATERIAL: BLACK 0.25" HMWPE
FILTER FABRIC MATERIAL: REFER TO SPEC
SCALE: NOT TO SCALE
LAST UPDATED: OCTOBER 2018

Distributed by: Colonial Construction Materials
P. 800-436-6287
www.colonial-materials.com